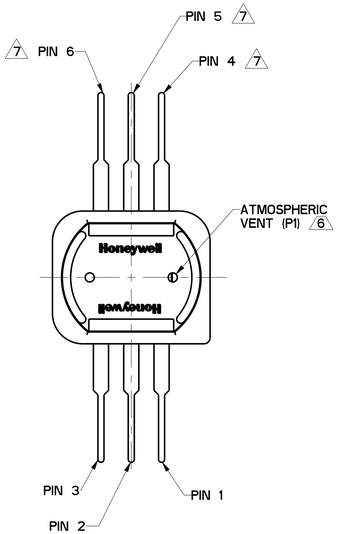

LEAD PIN OUT		
Vout	GND	Vs
3	2	1

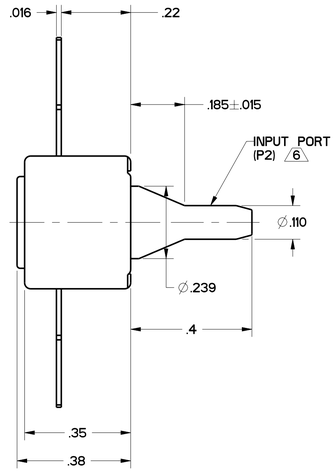

LEAD STYLE 1

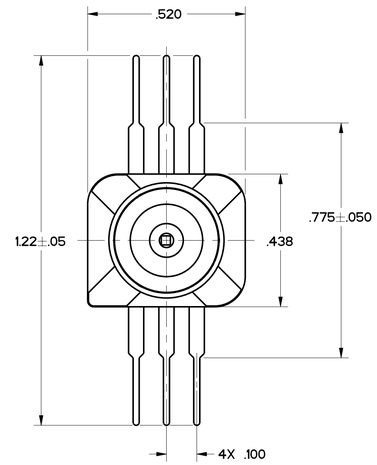

GENERAL CHARACTERISTICS	
PRESSURE RANGE	SEE CHART
OVERPRESSURE	SEE CHART
TEMPERATURE RANGES STORAGE OPERATING 5	 -55° TO +125°C -45° TO +125°C
SUPPLY VOLTAGE	5.0 Vdc (NOM) ±.25 Vdc
SUPPLY CURRENT	10mA MAX
SHORT CIRCUIT LIMIT	4
OUTPUT SOURCE CURRENT	0.5 mA MAX
OUTPUT SINK CURRENT	1.0 mA MAX
OUTPUT CAPACITANCE DRIVE CAPABILITY	0.01 µF MAX
RATIOMETRICITY	±0.25% SPAN TYP

OUTPUT PERFORMANCE AT 25°C AND 5.00±.01 VDC SUPPLY UNLESS NOTED

NULL (0 PSIG)	SEE CHART							
FULL SCALE	4.500 Vdc TYP							
SPAN	SEE CHART							
SENSITIVITY	SEE CHART							
HYSTERESIS & REPEATABILITY	0.15% SPAN TYP							
TEMPERATURE ERROR 1	0 TO -15 PSI	0 TO 15 PSI	0 TO 30 PSI	0 TO 100 PSI	0 TO 150 PSI	0 TO 250 PSI	0 TO 500 PSI 8	0 TO 300 mmHg
NULL SHIFT								
+25° TO +18°C	±0.75% SPAN MAX	±2.00% SPAN MAX	±1.50% SPAN MAX	±1.25% SPAN MAX	±0.75% SPAN MAX	±0.75% SPAN MAX	±1.00% SPAN MAX	±1.25% SPAN MAX
+25° TO +63°C		±2.00% SPAN MAX	±1.50% SPAN MAX	±1.25% SPAN MAX	±0.75% SPAN MAX	±0.75% SPAN MAX	±1.00% SPAN MAX	±1.25% SPAN MAX
+25° TO -45°C	±1.00% SPAN MAX	±2.75% SPAN MAX	±1.75% SPAN MAX	±2.00% SPAN MAX	±1.00% SPAN MAX	±1.00% SPAN MAX	±1.50% SPAN MAX	±2.75% SPAN MAX
+25° TO +85°C	±1.00% SPAN MAX	±2.75% SPAN MAX	±2.00% SPAN MAX	±2.00% SPAN MAX	±1.00% SPAN MAX	±1.00% SPAN MAX	±1.50% SPAN MAX	±2.50% SPAN MAX
+25° TO +125°C 5			±2.25% SPAN MAX	±3.00% SPAN MAX	±1.50% SPAN MAX	±2.00% SPAN MAX	±2.50% SPAN MAX	±2.50% SPAN MAX
SPAN SHIFT								
+25° TO +18°C	±2.00% SPAN MAX	±0.75% SPAN MAX	±1.50% SPAN MAX	±0.75% SPAN MAX	±0.75% SPAN MAX	±0.75% SPAN MAX	±0.75% SPAN MAX	±0.75% SPAN MAX
+25° TO +63°C		±0.75% SPAN MAX	±1.50% SPAN MAX	±0.75% SPAN MAX	±0.75% SPAN MAX	±0.75% SPAN MAX	±0.75% SPAN MAX	±0.75% SPAN MAX
+25° TO -45°C	±2.25% SPAN MAX	±1.00% SPAN MAX	±1.75% SPAN MAX	±1.00% SPAN MAX	±1.00% SPAN MAX	±1.00% SPAN MAX	±1.00% SPAN MAX	±2.00% SPAN MAX
+25° TO +85°C	±1.25% SPAN MAX	±1.00% SPAN MAX	±2.00% SPAN MAX	±1.00% SPAN MAX	±1.00% SPAN MAX	±1.00% SPAN MAX	±1.00% SPAN MAX	±1.75% SPAN MAX
+25° TO +125°C 5			±2.25% SPAN MAX	±2.00% SPAN MAX	±1.50% SPAN MAX	±2.00% SPAN MAX	±1.50% SPAN MAX	±1.75% SPAN MAX
COMBINED NULL AND SPAN SHIFT								
+25° TO +18°C	±1.50% SPAN MAX	±2.00% SPAN MAX	±2.00% SPAN MAX	±1.50% SPAN MAX	±0.75% SPAN MAX	±0.75% SPAN MAX	±1.00% SPAN MAX	±1.50% SPAN MAX
+25° TO +63°C		±2.00% SPAN MAX	±2.00% SPAN MAX	±1.50% SPAN MAX	±0.75% SPAN MAX	±0.75% SPAN MAX	±1.00% SPAN MAX	±1.50% SPAN MAX
+25° TO -45°C	±1.75% SPAN MAX	±3.00% SPAN MAX	±2.50% SPAN MAX	±2.50% SPAN MAX	±1.00% SPAN MAX	±1.00% SPAN MAX	±1.75% SPAN MAX	±4.00% SPAN MAX
+25° TO +85°C	±1.00% SPAN MAX	±3.00% SPAN MAX	±2.50% SPAN MAX	±2.50% SPAN MAX	±1.00% SPAN MAX	±1.00% SPAN MAX	±1.50% SPAN MAX	±4.00% SPAN MAX
+25° TO +125°C 5			±2.50% SPAN MAX	±3.00% SPAN MAX	±1.50% SPAN MAX	±3.00% SPAN MAX	±3.00% SPAN MAX	±4.00% SPAN MAX
LINEARITY (B.F.S.L.)	0.30% SPAN MAX	0.20% SPAN MAX	0.3% SPAN MAX	0.10% SPAN MAX	0.10% SPAN MAX	0.10% SPAN MAX	0.20% SPAN MAX	±0.20% SPAN MAX
ACCURACY (25C) RSS 2	±0.4% SPAN	±0.4% SPAN	±0.40% SPAN MAX	±0.2% SPAN	±0.2% SPAN	±0.2% SPAN	±0.2% SPAN	±0.40% SPAN MAX
TOTAL ACCURACY 3 -18 to 63°C		±4.0% SPAN MAX	±1.50% SPAN MAX	±2.5% SPAN MAX	±2% SPAN MAX	±2% SPAN MAX	±2% SPAN MAX	±2.00% SPAN MAX
-45 to 85°C	±2.25% SPAN MAX	±4.0% SPAN MAX	±1.75% SPAN MAX	±2.5% SPAN MAX	±2% SPAN MAX	±2% SPAN MAX	±3% SPAN MAX	±4.00% SPAN MAX
-45 TO 125°C 5			±2.25% SPAN MAX	±3.0% SPAN MAX	±2.50% SPAN MAX	±3% SPAN MAX	±3% SPAN MAX	±4.00% SPAN MAX

NOTES

1. TEMPERATURE ERROR IS THE MAXIMUM DEVIATION FROM 25° PERFORMANCE OVER THE ENTIRE TEMPERATURE RANGE SHOWN
2. ACCURACY IS DEFINED AS THE 25C, RSS ERRORS FOR LINEARITY, HYSTERESIS AND REPEATABILITY
3. TOTAL ACCURACY IS THE MAXIMUM DEVIATION FROM THE 25C REFERENCE TRANSFER FUNCTION AT ANY PRESSURE OR TEMPERATURE OVER THE SPECIFIED RANGES
4. OUTPUT CAN BE SHORTED TO THE POSITIVE TERMINAL OR THE GROUND TERMINAL
5. PRODUCT 100% TESTED AT THE -45 TO +85°C RANGE ONLY
6. INPUT MEDIA:
   - P1 - DRY GASES ONLY: MEDIA MUST BE COMPATIBLE WITH EPOXY BASED ADHESIVE
   - P2 - MEDIA MUST BE COMPATIBLE WITH GLASS, SILICON, STAINLESS STEEL, INVAR, Sn/Ni PLATING OR Sn/Ag SOLDER
7. PINS 4, 5 OR 6 ARE INTERNAL DEVICE CONNECTIONS, DO NOT CONNECT TO EXTERNAL CIRCUITRY OR GROUND
8. PRODUCT TESTED AT 250 PSI

40PC _ _ _ _ _ _ _

PRESSURE RANGE
- 015 - 0 TO 15 PSI
- 100 - 0 TO 100 PSI
- 150 - 0 TO 150 PSI
- 250 - 0 TO 250 PSI
- 500 - 0 TO 500 PSI
- 030 - 0 TO 30 PSI
- 006 - 0 TO 300 mmHg

PRESSURE TYPE
- G - GAGE
- V - VACUUM

LEAD STYLE
- 1 - UNFORMED
- 2 - FORMED AWAY FROM PORT
- 3 - FORMED TOWARDS PORT

PORT STYLE
- A - STRAIGHT

					OUTPUT PERFORMANCE AT 25°C AND 5.00±.01 VDC SUPPLY	
CATALOG LISTING	LEAD STYLE	PRESSURE RANGE	OVER-PRESSURE	SENSITIVITY	NULL (0 PSIG) VDC	SPAN VDC
40PC015G1A	1	0 TO 15 PSI	45 PSI	266.6 mV/PSI TYP	.500±.110	4.000±.110
40PC015G2A	2	0 TO 15 PSI	45 PSI	266.6 mV/PSI TYP	.500±.110	4.000±.110
40PC015G3A	3	0 TO 15 PSI	45 PSI	266.6 mV/PSI TYP	.500±.110	4.000±.110
40PC100G1A	1	0 TO 100 PSI	200 PSI	40.0 mV/PSI TYP	.500±.040	4.000±.090
40PC100G2A	2	0 TO 100 PSI	200 PSI	40.0 mV/PSI TYP	.500±.040	4.000±.090
40PC100G3A	3	0 TO 100 PSI	200 PSI	40.0 mV/PSI TYP	.500±.040	4.000±.090
40PC150G1A	1	0 TO 150 PSI	300 PSI	26.6 mV/PSI TYP	.500±.040	4.000±.070
40PC150G2A	2	0 TO 150 PSI	300 PSI	26.6 mV/PSI TYP	.500±.040	4.000±.070
40PC150G3A	3	0 TO 150 PSI	300 PSI	26.6 mV/PSI TYP	.500±.040	4.000±.070
40PC250G1A	1	0 TO 250 PSI	500 PSI	16.0 mV/PSI TYP	.500±.040	4.000±.070
40PC250G2A	2	0 TO 250 PSI	500 PSI	16.0 mV/PSI TYP	.500±.040	4.000±.070
40PC250G3A	3	0 TO 250 PSI	500 PSI	16.0 mV/PSI TYP	.500±.040	4.000±.070
40PC500G1A	1	0 TO 500 PSI	1000 PSI	8.0 mV/PSI TYP	.500±.040	4.000±.090
40PC500G2A	2	0 TO 500 PSI	1000 PSI	8.0 mV/PSI TYP	.500±.040	4.000±.090
40PC500G3A	3	0 TO 500 PSI	1000 PSI	8.0 mV/PSI TYP	.500±.040	4.000±.090
40PC015V1A	1	0 TO -15 PSI	30 PSI	266.6 mV/PSI TYP	.500±.040	4.0±.1
40PC015V2A	2	0 TO -15 PSI	30 PSI	266.6 mV/PSI TYP	.500±.040	4.0±.1
40PC015V3A	3	0 TO -15 PSI	30 PSI	266.6 mV/PSI TYP	.500±.040	4.0±.1
40PC030G1A	1	0 TO 30 PSI	60 PSI	133.3 mV/PSI TYP	.500±.040	4.000±.080
40PC030G2A	2	0 TO 30 PSI	60 PSI	133.3 mV/PSI TYP	.500±.040	4.000±.080
40PC030G3A	3	0 TO 30 PSI	60 PSI	133.3 mV/PSI TYP	.500±.040	4.000±.080
40PC006G1A	1	0 TO 300 mmHg	650 mmHg	13.33 mV/mmHg	.500±.050	4.000±.050
40PC006G2A	2	0 TO 300 mmHg	650 mmHg	13.33 mV/mmHg	.500±.050	4.000±.050
40PC006G3A	3	0 TO 300 mmHg	650 mmHg	13.33 mV/mmHg	.500±.050	4.000±.050

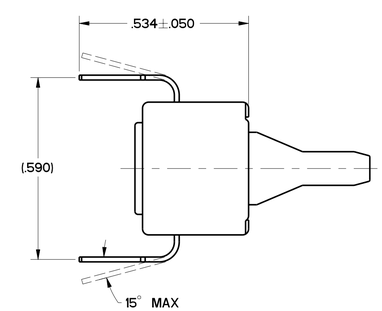

LEAD STYLE 2

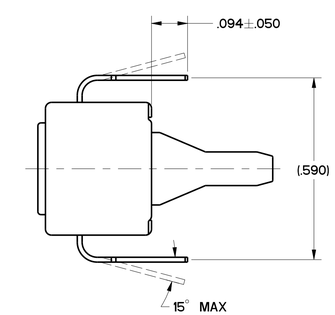

LEAD STYLE 3

CAUTION
ELECTROSTATIC SENSITIVE DEVICES
DO NOT OPEN OR HANDLE EXCEPT AT A STATIC FREE WORKSTATION

ESD SENSITIVITY: CLASS 1

THIRD ANGLE PROJECTION

SCALE 4 : 1

DO NOT SCALE PRINT

UNLESS OTHERWISE SPECIFIED TOLERANCES ARE

ONE PLACE	(.0)	±.030
TWO PLACE	(.00)	±.015
THREE PLACE	(.000)	±.005
ANGLES		±

WEIGHT

THIS DRAWING COVERS A PROPRIETARY ITEM AND IS THE PROPERTY OF MICRO SWITCH, A DIVISION OF HONEYWELL. THIS DRAWING IS NOT TO BE COPIED OR USED WITHOUT THE APPROVAL OF MICRO SWITCH.

FED. MFG. CODE 91929
MICRO SWITCH a Honeywell Division

PRESSURE SENSOR

CATALOG LISTING
40PC SERIES CHART 1

ANSI Y14.5M-1982 APPLIES

40PC SERIES CHART 1 — 1 OF 1 — PAGE — M — RELEASE NO. PR-22691 — REPLACES X102329-PC

DRAWING NUMBER — ISSUE 20 — CHECK

REVISIONS
- A PR-23762 — S A Y — 7 DEC 98
- B PR24074 — J A F — 28 JUN 99
- C PR-24857 — L J K — 18 JAN 00
- D PR-24329 — F E T — 8 MAR 00
- E 200461 — RBD — 25 MAY 00

DRAWN SAV 17 DEC 98 — CHECK JAF 7 DEC 98 — CHECK — PTC/CAD